Macurco™ Carbon Monoxide Detector

CM-E1

For use with alarm control panels

SIGNALING UL LISTED

Carbon Monoxide Detection

The CM-E1 is a low voltage detector of Carbon Monoxide (CO). The CM–E1 is designed for connection to UL Listed Fire Alarm/Burglary Control Panels. Alarm control panels that work on 12 or 24 VDC can provide battery backup to the CM-E1 detectors. This carbon monoxide detector is designed to detect CO gas from ANY source of combustion. It is NOT designed to detect smoke, fire or any other gas.

Features

- Listed to UL standard 2075 for the Standard For Safety for Gas and Vapor Detector and Sensors
- Tested to UL 2075 using UL 2034 Sensitivity limits for carbon monoxide gas
- California State Fire Marshal Listed
- Surface mounts to a wall using the supplied enclosure rear housing
- Flush mounts in a 2 x 4 (1-1/2 inch deep minimum) single gang switch, or handy electrical box
- Small, low profile, attractive unit in a white plastic case
- Detector alarms at multiple levels of exposure to carbon monoxide based on time weighted averages of the gas present
- Test & Reset switch conducts internal tests and actuates alarm relay
- Highly linear electrochemical sensor
- N.O. or N.C. SPST Alarm Relay and N.C. SPST Trouble relay to connect to Alarm Control Panels
- Buzzer: Produces repeating loud tone bursts during alarm, and chirps if sensor trouble is found

PROTECTION Macurco 40 Years 1972 2012 PREVENTION & VALUE

Manufactured by Aerionics, Inc. Round Rock, TX – Phone: 1-877-367-7891 – Email: info@aerionicsinc.com – www.macurco.com

CM-E1 Specifications

- Voltage: 9-32 VDC
- Current (normal / alarm): 15mA / 35mA @ 9-32V
- Size: 3-1/8 X 5-1/8 X 1-1/2 inch (7.94 x 13.02 x 3.81 cm)
- Alarm Relay: SPST, 100mA, 40VDC
- Trouble Relay: SPST, 100mA, 40VDC
- Buzzer Rating: 85 dBA at 10 Feet
- Shipping Weight: One pound
- Operating Temp. Range: 40°F (4.4°C) to 100°F (37.8°C)
- Alarm Setting: Per UL 2034
- Color: White
- Designed for use with a UL Listed Fire Alarm/Burglary Control Panel

Installation

With the CM-E1 faceplate mounted on the enclosure's rear-housing the unit can be surface mounted on a wall. A thin mid-plate enclosure component is also supplied with the CM-E1 to mount the CM-E1 on a 2 x 4 inch (5.08cm x 10.16 cm) switch box - single-gang or "handy", provided by the installer.

Location

There are two usual sources of CO - defective heat sources (furnaces or wood burning stoves) and automobiles running in adjoining garages. The CM-E1 can detect CO from these sources, as well as any other sources of CO. For best operation, mount a CM-E1 in the hallway near each bedroom or office area. In addition, another CM-E1 may be mounted just inside the door from the adjoining garage. Consider placing another detector in a bedroom or office that is adjacent to a furnace room. The detector may be installed on either a ceiling or a wall. If installed on a peaked, gabled, or sloped ceiling, it should be located about 3 feet (1 meter) from the highest point. The unit can be placed vertically or horizontally on a wall, so the information on the front of the CM-E1 can be read in a normal manner (not upside down). Do NOT mount the CM-E1 in a corner. Use the same spacing as for smoke detectors-- 30 foot (9 meters) centers, 900 sq. feet (83 sq. meters) per detector.

TYPICAL CONNECTION OF TWO CM-E1 TO AN ALARM CONTROL PANEL

TYPICAL COVERAGE 900 SQUARE FEET

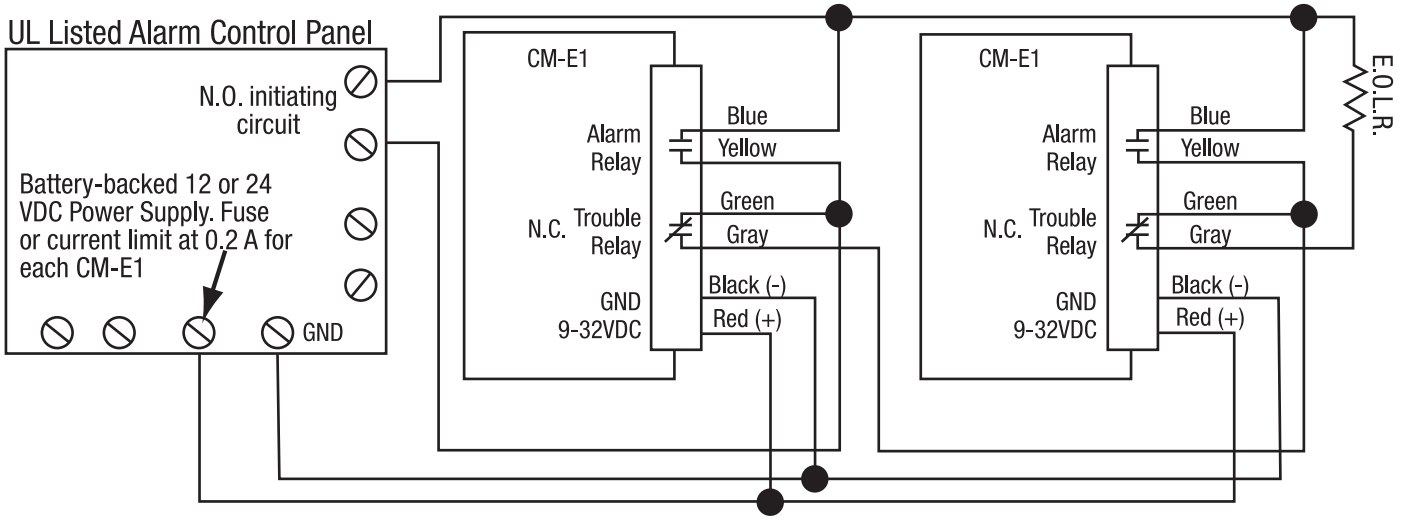

Made in the U.S.A. with US and imported materials

© Aerionics 2012. All rights reserved.
Macurco is a trademark of Aerionics, Inc.

MACURCO
Gas Detection Experts